TYPE "A" BLOCKING FOR 11 1/4°–22 1/2°–30° VERTICAL BENDS						
		VB		S	D	L
PIPE SIZE NOMINAL DIAMETER– INCHES	TEST PRESSURE PSI	VERTICAL BEND DEGREES	No. OF CU. FT. OF CONC. BLOCKING	SIDE OF CUBE LIN. FT.	DIAM. OF SHACKLE RODS (2) INCHES	DEPTH OF RODS IN CONCRETE LIN. FT.
4"	250	11 1/4	6	1.8	5/8"	1.5
		22 1/2	12	2.3		
		45	22	2.8		
6"	250	11 1/4	14	2.4	5/8"	1.5
		22 1/2	27	3.0		
		45	50	3.7		
8"	250	11 1/4	25	2.9	5/8"	1.5
		22 1/2	48	3.6		
		45	89	4.5		
12"	250	11 1/4	55	3.8	5/8"	2.0
		22 1/2	108	4.8		
		45	200	5.1	7/8"	2.0
16"	250	11 1/4	98	4.6	5/8"	1.5
		22 1/2	192	5.8	7/8"	2.0
		45	355	7.1	1 1/8"	2.5

THIS TABLE REPRESENTS THE "MINIMUM' CONSTRUCTION STANDARD. THE DEVELOPER'S ENGINEER SHALL BE RESPONSIBLE FOR DETERMINING THE APPROPRIATE SIZE OF ALL ANCHOR BLOCKS BASED ON EXISTING AND LOCAL CONDITIONS.

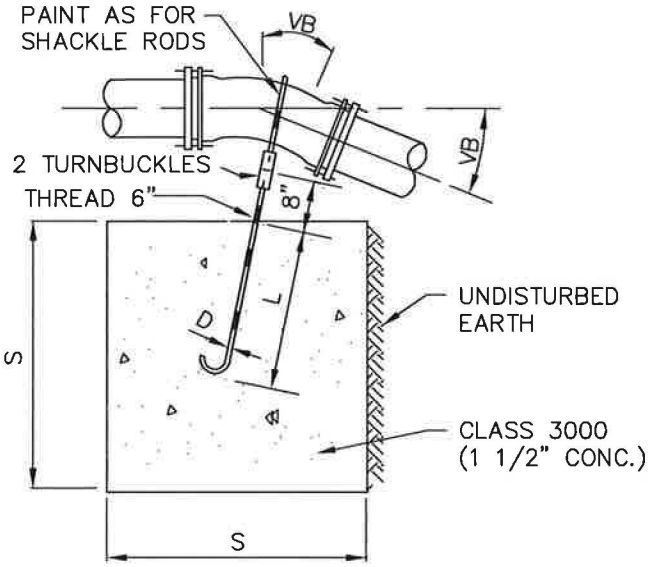

11.25° AND 22.5° BENDS

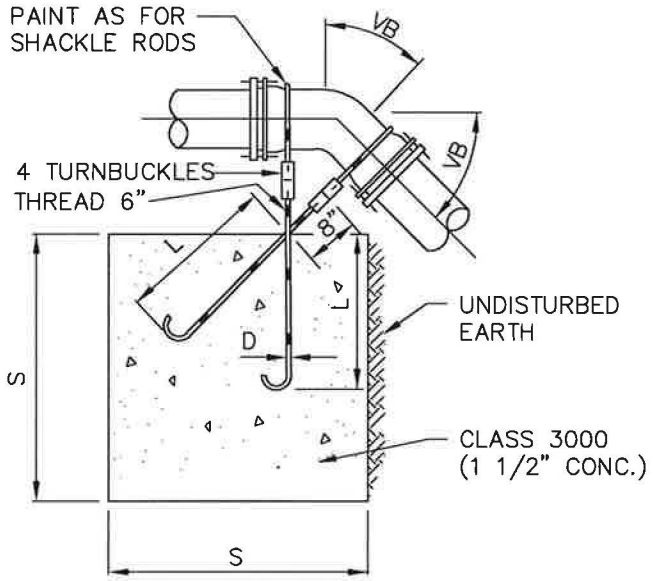

45° BENDS

Approved: March 16, 2018

City Engineer Date

WATER STANDARD DETAIL

City of BONNEY Lake

Dwg No: W5

VERTICAL ANCHOR BLOCK